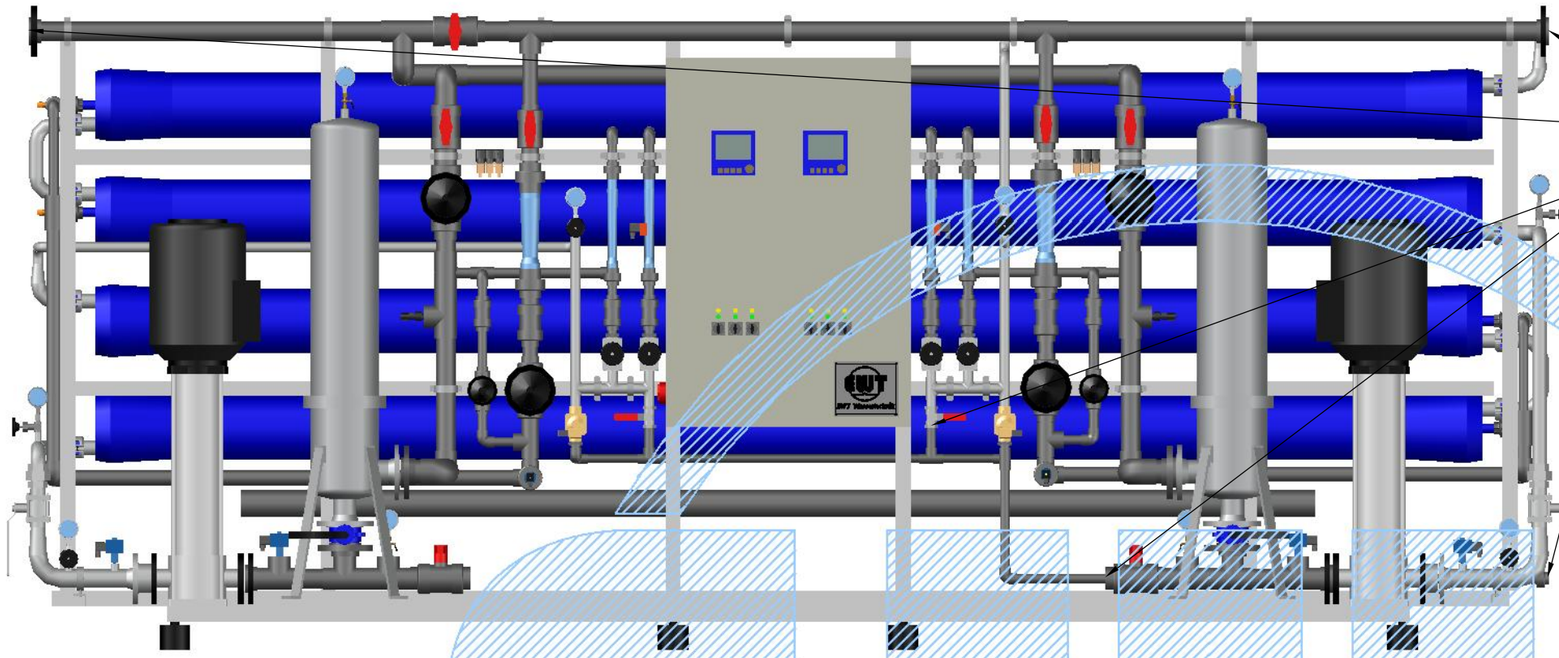

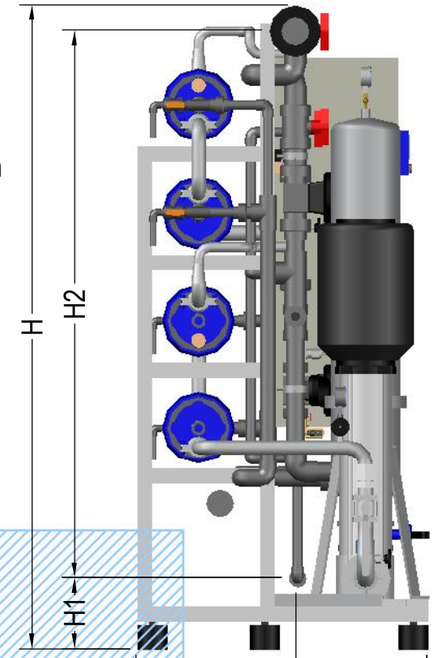

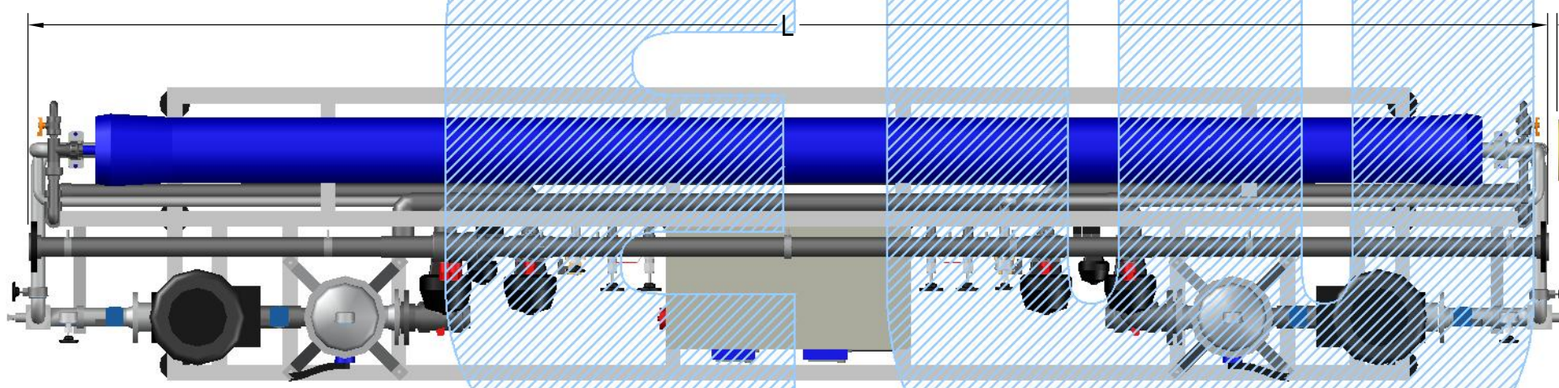

reverse osmosis membrane element, required space for maintenance purposes (both on the left and right side).

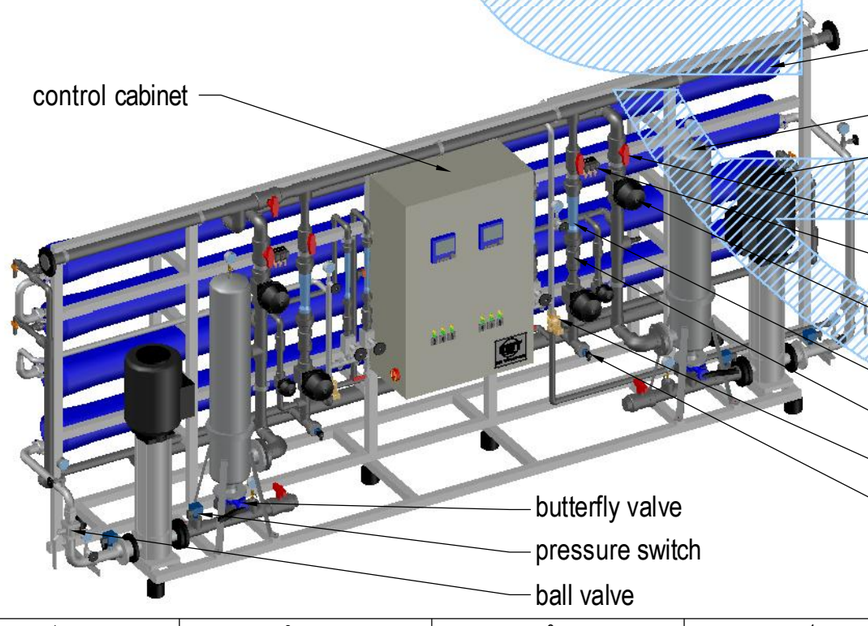

00	16.10.2014	O. Eckert	Ersterstellung / first issue

Bauherr / Owner	Kunde / Client	*EWT* Wassertechnik
Maßstab / Scale: -	**Example: Reverse Osmosis Plant** two lines, single pass, with concentrate return both lines assembled onto a single skid	Zeichnung Nr. / Drawing No.: 20005-8102-00
		Kommission Nr. / Job No.: 20005
Größe / Size: A3		Kennwort / Code Word:
		Revisionsstand / Revision Index: 00

http://www.ewt-wasser.de/